DHSS – FY12 Governor's
Department Support Services
Quality Assurance & Audit

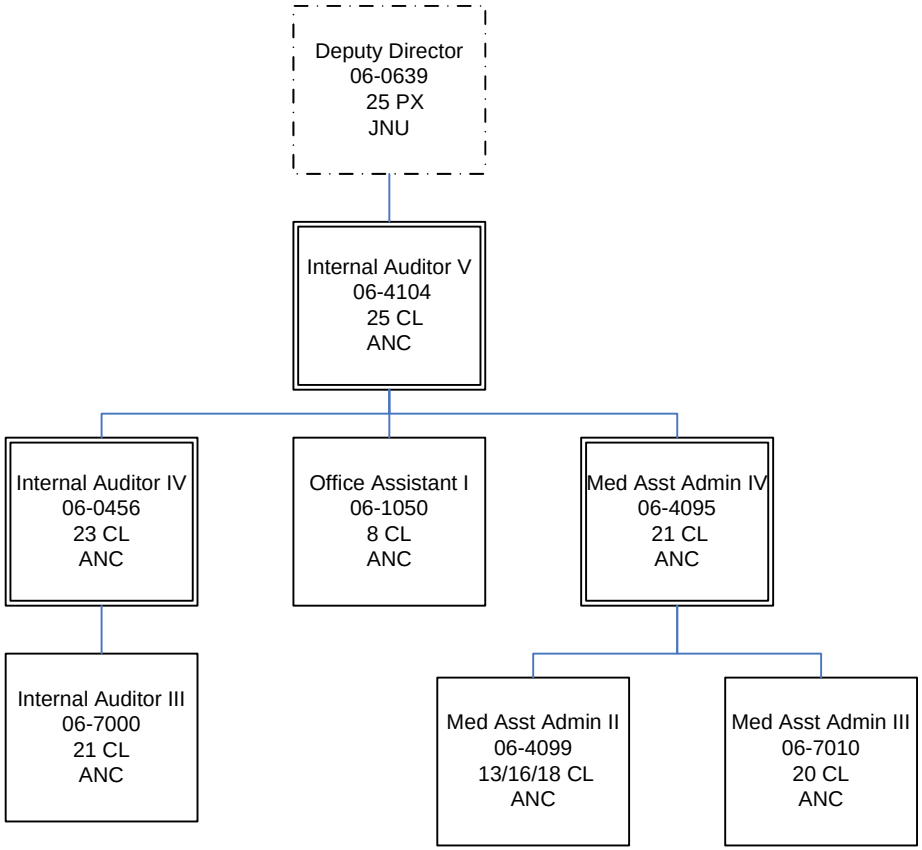


Updated:
12/17/2010 2:41:18
PM